MATCO mfg

Wheels & Brakes

W600 , W600XT
W600XTE & W600XLT
Wheels and Brakes

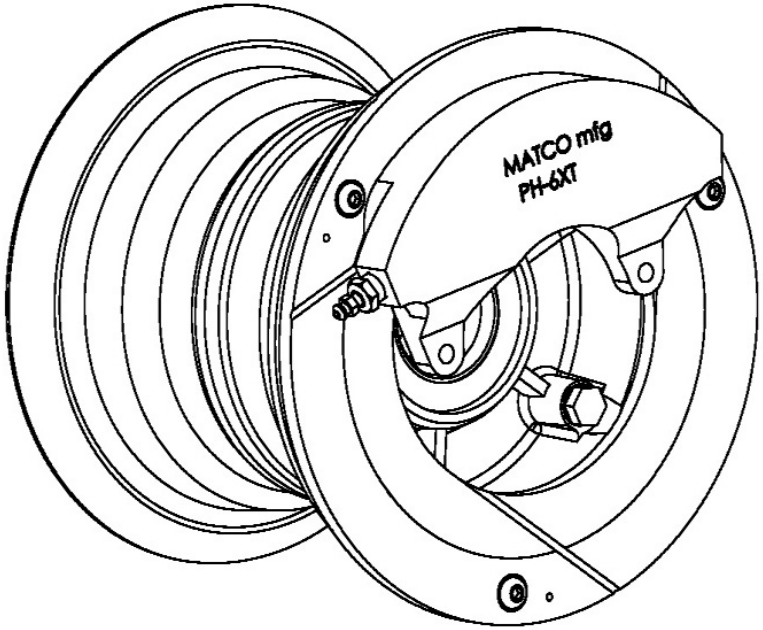

Technical Service Guide

REV B Aug 2018

Table of Contents

A. W600 / W600XT & W600XLT WHEEL & BRAKE ASSEMBLIES

MATCO mfg produces three outstanding 600X6 wheels with triple piston brake assemblies. The W600, W600XT and the W600XLT. These wheel and brake assemblies are designed for use on high performance aircraft over 2,000 pounds that require maximum braking dynamics.

DIMENSIONS

The W600 Series wheels are a 600X6 inch wheel manufactured to tire and rim specifications. They have a 6.56 inch width with additional 1.37-inch caliper spacing. Bearing spacing is 3.550 inches and axle spacing is 1.90 inches. The bearing axle diameter is 1.50 inches.

FEATURES

The W600 series wheels are cast utilizing a 535.2 aluminum alloy for superior strength and corrosion resistance. This alloy provides a lightweight wheel and affords many years of efficient performance. The W600 Series wheel utilizes a 1.5" tapered roller bearing that is rigorously tested and designed to resist bearing fatigue providing long bearing life. The W600 series wheel also features a triple piston brake assembly. The W600 having three 1.25-inch pistons, while the W600XT and W600XLT boast three 1.50-inch pistons for maximum torque. The machining on this wheel produces a clean smooth surface to accommodate a variety of commercial tires to including Goodyear, McCreary, Michelin, and others. The W600 series wheel can be used in conjunction with the A6 bolt on axle for ease of installation. The A6 axle is manufactured using 2024-T351-T4 alloys and has a bolt hole diameter of 2.2502 to match the Cessna bolt hole pattern.

PERFORMANCE

The W600 Series wheels are designed for the following performance standards: (all have the same Static & Limit Load Rating)

W600 WHEEL

Static Capacity	1,860 pounds
Load Limit	5,580 pounds
Max Accel/Stop (Kinetic Energy)	337,932 foot-pounds
Torque Rating @ 450psi	4,473 inch pounds
Weight	12.6 pounds

W600XT WHEEL

Max Accel/Stop (Kinetic Energy)	337,932 foot-pounds
Torque Rating @ 450 psi	6,441 inch pounds
Weight	12.6 pounds

W600XLT WHEEL

Max Accel/Stop (Kinetic Energy)	225,000 foot-pounds
Torque Rating	6,441 inch pounds
Weight	11.2 pounds

W600XTE WHEEL

Max Accel/Stop (Kinetic Energy)	450,000 foot-pounds
Torque Rating @ 450 psi	6,441 inch pounds
Weight	13.8 pounds

TIRE & TUBE

Any six-inch tire and tube combination can be used on the W600 series wheel. The most common combination is the 600X6 6 ply, with a 4 ply rating being the minimum that is recommended.

The tube used with this wheel should have a straight or 45-degree valve stem, however, a 90-degree valve stem can be used. Since an internal caliper is used, wide tires can be accommodated without change on the W600 Series.

B. W600 SERIES WHEEL PARTS LIST

W600 SERIES WHEEL (See Fig. 1)

DWG #	PART NUMBER	DESCRIPTION	QNTY
1	MSCAN363-524	Flex Lock Nut	3
2	WHLLM29700LA	Roller Bearing 1.50	2
3	MSCAN960-516L	Washer	6
4	WHLLM29710	Race, 1.50	2
5	WHLW600/1.50	Valve Half, W600 1.50	1
6	WHLB600/1.50	Brake Half, W600 1.50	1
7	MSCAN5-45A	Bolt	3
8	WHLD6 or D6HE or D2*	Brake Disc W600	1
9	MSC.25-20X.75BHCS	Button Head Cap Screw	3
10	WHLNL1/4	NordLoc Washer	3
not on dwg	MSC10-24X.38SLTTHM	& WHLWC	

- The W600XLT wheel, uses the WHLD2 disc & W600XTE uses WHLD6HE.

C. WHLB600 BRAKE - PARTS LIST

WHLB600 W600 ASSY W/BPA1.50 (See Fig. 2)

DWG #	PART NUMBER	DESCRIPTION	QNTY
1	MSC.25-28NYLOCK	Nylock Nut	2
2	MSCNL8	Washer, Nordloc	4
3	WHLPH-6	Puck Housing Triple	1
4	MSC2-214	O-Ring Buna N	3
5	WHLPI-3	Piston, Triple Puck 1.25	3
6	MSC2X	Cap Plug	1
7	WHLMBS6	Moveable Brake shoe	1
8	MSC4-4	Brass Rivet	4
9	MSC4-6	Brass Rivet	4
10	WHLM66-105	Lining, Triple	4
11	WHLSBS6	Stationary Brake Shoe	1
12	MSC.234-X.50IL	Dust Plug	1
13	MSCF6446-007	Brake Bleeder Valve	1
14	MSCBBS(A)	Brake bleeder Seat	1
15	WHLBSP6	Spacer, Dual/Triple	2
16	WHLBPA1.50	Brake Plate 1.50	1
17	MSC.31-18X1.75HH	Bolt, Hexhead	4
18	MSCAN4-20A	Bolt	2
19	WHLBSP600	Spacer, W600	4
20	MSCAN960-416L	Washer	4

D. WHLB600XT BRAKE – PARTS LIST

WHLB600XT W600XT ASSY W/BPA1.50, 1.5 (See Fig. 3)

NUMBER	PART NUMBER	DESCRIPTION	QNTY
1	MSC.25-28NYLOCK	Nylock Nut	2
2	MSCNL8	Washer, Nordloc	4
3	WHLPH-6XT	Puck Housing Triple	1
4	MSC2-218	O-Ring Buna N	3
5	WHLPI-3XT	Piston Triple Puck, 1.5”	3
6	MSC2X	Cap Plug	1
7	WHLMBS6XT	Moveable Brake Shoe	1
8	MSC4-4	Brass Rivet	4
9	MSC4-6	Brass Rivet	4
10	WHLM66-105	Lining, Triple	4
11	WHLSBS6	Stationary Brake Shoe	1
12	MSC.234-X.50IL	Dust Plug	1
13	MSCF6446-007	Brake Bleeder Valve	1
14	MSCBBS(A)	Brake bleeder Seat	1
15	WHLBSP6	Spacer, Dual/Triple	2
16	WHLBPA1.50	Brake Plate 1.50	1
17	MSC.31-18X1.75HH	Bolt, Hexhead	4
18	MSCAN4-20A	Bolt	2
19	WHLBSP600	Spacer, W600	2
20	MSCA960-416L	Washer	4
21	WHLBSP600XT	Spacer, W600XT	1

B600XT-1 (Used on W600XTE. Same as above except)

NUMBER	PART NUMBER	DESCRIPTION	QNTY
15	WHLBSP6-1	Spacer, Dual/Triple	2
17	MSC.31-18X1.825HH	Bolt, Hexhead	4
18	MSCAN4-21A	Bolt	2
19	WHLBSP600-1	Spacer, W600XTE	2
21	WHLBSP600XT-1	Spacer, W600XTE	1

E. WHLB600XLT BRAKE – PARTS

WHLB600XLT W600XLT ASSY W/BPA1.50, 1.5 (See Fig. 3)

NUMBER	PART NUMBER	DESCRIPTION	QNTY
1	MSC.25-28NYLOCK	Nylock Nut	2
2	MSCNL8	Washer, Nordloc	4
3	WHLPH-6XT	Puck Housing Triple	1
4	MSC2-218	O-Ring Buna N	3
5	WHLPI-3XT	Piston Triple Puck, 1.5”	3
6	MSC2X	Cap Plug	1
7	WHLMBS6XT	Moveable Brake Shoe	2
8	MSC4-4	Brass Rivet	4
9	MSC4-6	Brass Rivet	4
10	WHLM66-105	Lining, Triple	4
11	WHLSBS6	Stationary Brake Shoe	1
12	MSC.234-X.50IL	Dust Plug	1
13	MSCF6446-007	Brake Bleeder Valve	1
14	MSCBBS(A)	Brake bleeder Seat	1
15	WHLBSP6	Spacer, Dual/Triple	2
16	WHLBPA1.50	Brake Plate 1.50	1
17	MSC.31-18X1.75HH	Bolt, Hexhead	4
18	MSCAN4-20A	Bolt	2
19	WHLBSP600	Spacer, W600	2
20	MSCA960-416L	Washer	4
21	WHLBSP600XT	Spacer, W600XT	1

F. W600 SERIES WHEEL - DRAWING

Fig. 1

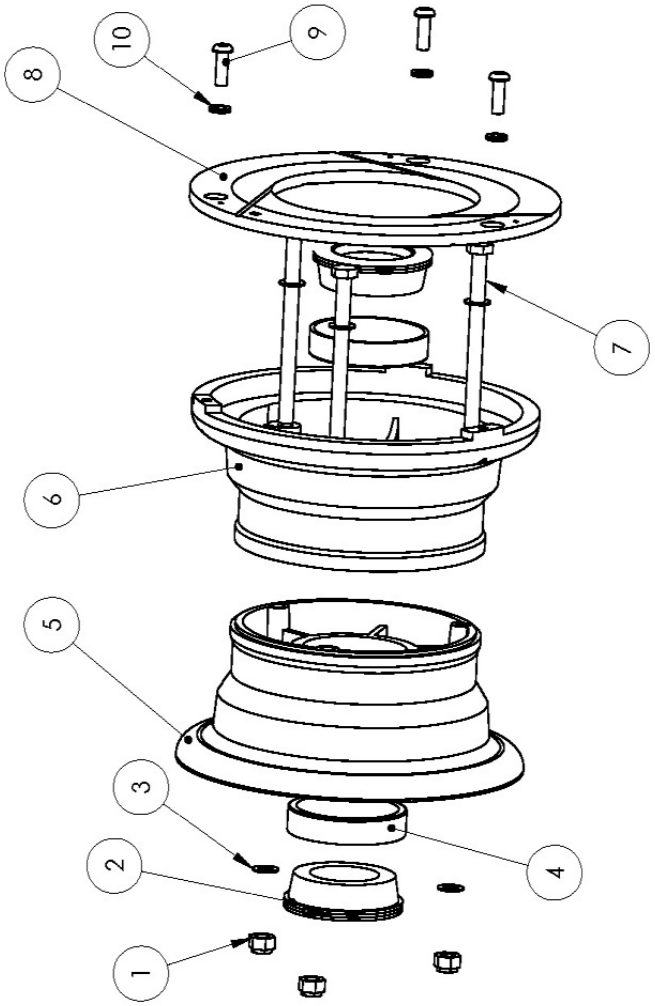

G. B600 BRAKE ASSEMBLY

W600 BRAKE ASSEMBLY
Fig. 2

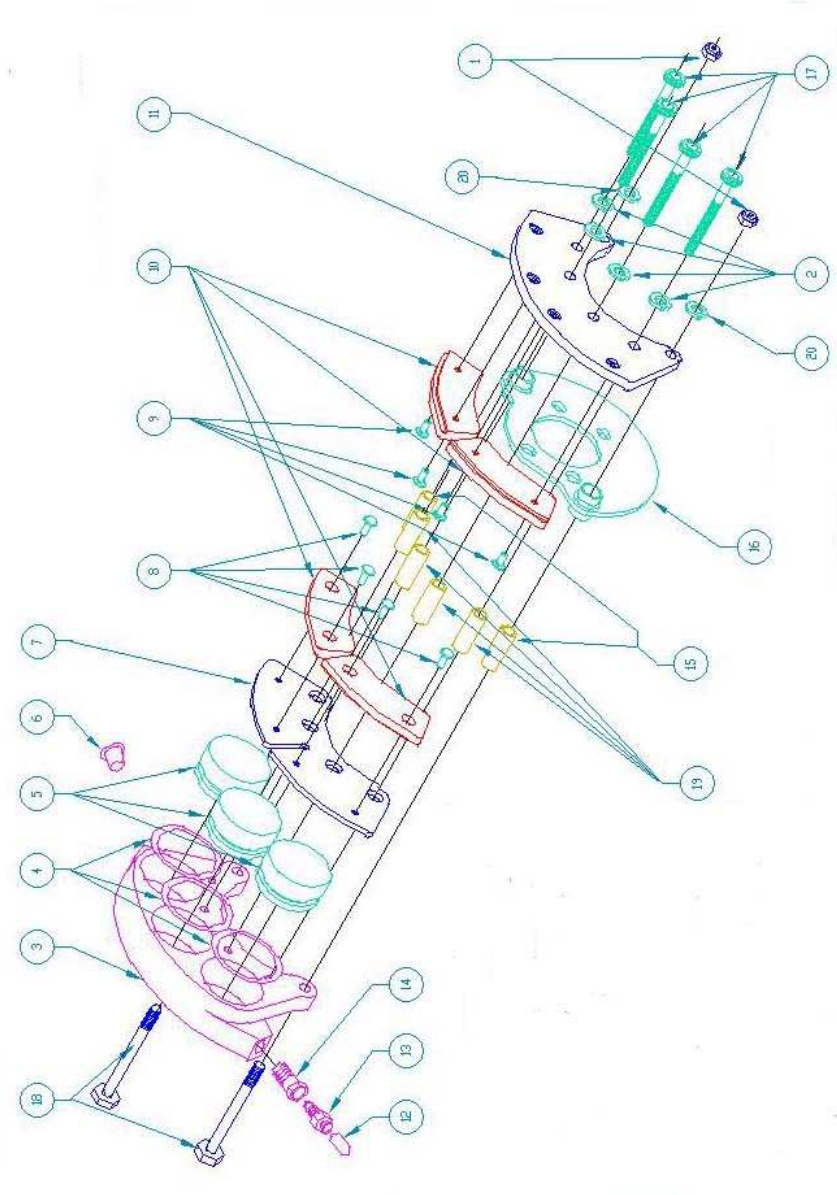

H. B600XT & B600XLT BRAKE ASSEMBLY

W600XT & W600XLT BRAKE ASSEMBLY
Fig. 3

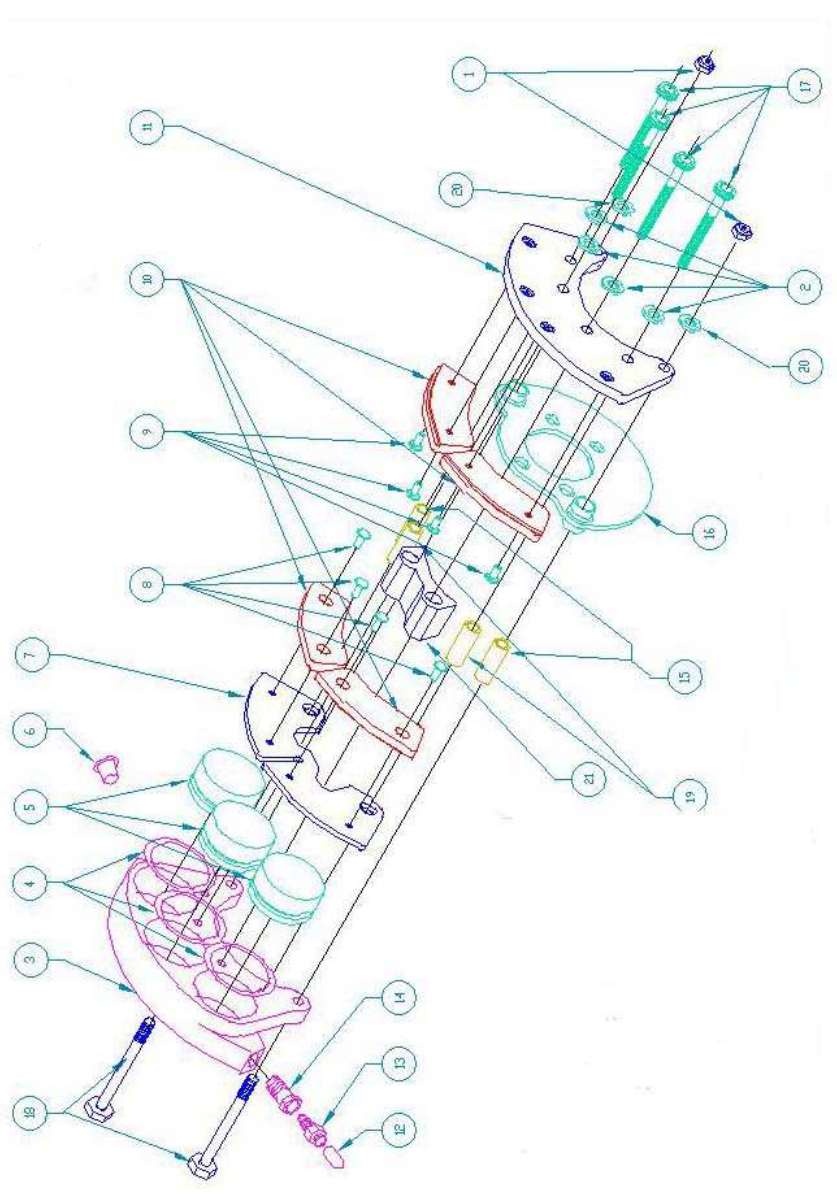

I. BRAKE LINING WEAR LIMITS

To eliminate wear on brake linings beyond design limitation and reduce possible piston damage or fluid leakage, the following information is presented. The WHLM66-105 lining (found on the W600 Series) should be replaced when the thickness of the remaining wear material reaches 0.100 IN. (2.54mm) See **Fig.4.** The WHLM66-105 lining has a visible wear notch located on the side of the lining. The inside edge of the visible wear notch is at the minimum material condition.

Fig.4

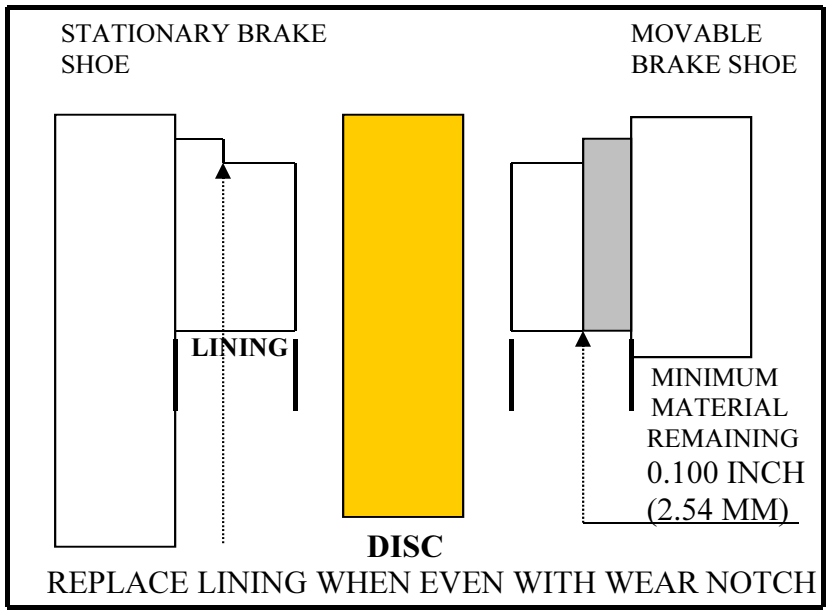

SwiftLine Pad Replacement Program

The ***Swiftline*** **Pad Replacement program is designed to:**

- Simplify pad replacement on MATCO mfg brakes saving valuable time.
- Eliminate the need to rivet linings saving maint. & tooling.
- Provide a 20 % discount on reline kits saving you money

For more information on Swiftline call 801-335-0582

J. BRAKE DISC INSPECTION

The MATCO brake disc will give years of trouble free service under normal field conditions. Conditions such as unimproved fields, standing water, industrial pollution, or frequent use of the aircraft may require more frequent inspection of the brake system and disc in order to prolong the life of the brake linings.

The disc should be checked for wear (**Fig.2 Dim.“A”)** and for any grooves, deep scratches, excessive pitting or coning of the brake disc. Although coning is rarely a problem with the MATCO disc, if it should occur, coning beyond 0.015 inch (0.381mm) in either direction is cause for replacement.

Isolated grooves up to .030 inch (0.76mm) deep should not be cause for replacement. Any grooving of the disk however, will reduce the service life of the linings.

The WHLD6, WHLD6HE & WHLD2 discs are plated for rust prevention. Within a few landings, the plating will wear off where the linings rub against the disc. The remaining portion of the disc will remain plated and corrosion free for an extended period of time under normal use. Nickel plated discs are available from MATCO mfg. for those demanding increased corrosion protection and wear.

Rust in varying degrees may form on the exposed portion of the disc. If a powdered rust appears on this surface, one or two braking applications during taxiing should wipe the disc clear. Rust build up beyond this point, may require removal of the disc from the wheel to properly clean both surfaces. A wire brush followed by 220-grit garnet paper should restore the braking surface adequately. Do not remove plating in areas that are not contacted by the linings.

Fig. 5

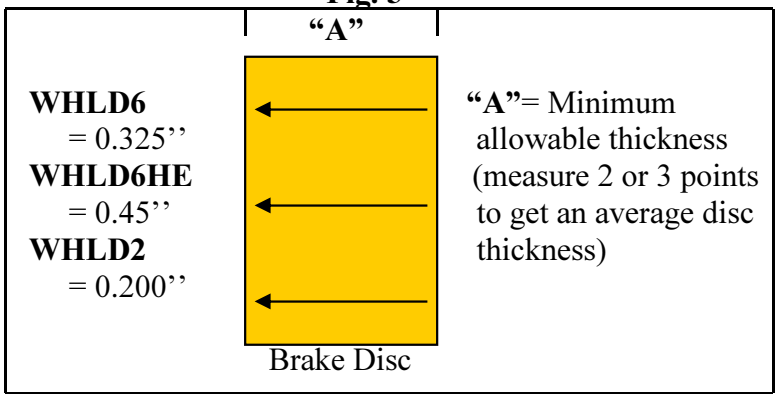

K. BRAKE LINING INSTALLATION

The following are instructions for properly removing and replacing brake linings WHLM66-105.

1. Remove the disc from the wheel by removing the 3 BHCS that hold it on. Disassemble the caliper assembly.

2. Remove old linings by drilling the crimped side of the rivet (Do not use a punch & hammer). Using a #25 drill (0.1495 diameter), drill through rivet taking care to avoid damaging the rivet hole. After drilling crimped edge off rivets, lift old lining and remaining rivet pieces from the brake shoe.

3. Inspect the brake shoe for any bending or other damage that may have occurred during service. A shoe with more than 0.010 bend should be replaced. Inspect rivet holes to ensure that no damage has occurred during removal.

4. Using a brake relining tool (*MATCO recommends a Threaded Screw Action such as the W404 from Aircraft Tool SupplyCo.*) or pneumatic press, replace the lining using the brass rivets shown on the illustrated parts list.

See MATCO SWIFTLINE SWFT-6, SWFT-6XT, or SWFT-6XLT kits to eliminate need to replace lining rivets.

L. MOUNTING THE TIRE & TUBE

NOTE: MATCO wheels are balanced at the factory and stamped with a chevron. The chevron should always be placed adjacent to and directly across from the valve hole. Verify alignment before mounting the tire.

Care should be taken to avoid pinching the tube between the wheel halves when mounting the tire and tube. To avoid this, slightly inflate tube after placing it in the tire. Tire mounting soap may also help. A thin strip of cardboard or poster paper wrapped around the wheel between the mounting half and the tube will help in preventing the tube from being pinched during assembly if it is unusually tight. Another method is to use 3 ratcheting bar clamps evenly spaced around the tire and tube to compress the tire. Compress sufficiently to allow the wheel halves to be seated against each other at the shiplap without contacting the tire. The tube can be visibly inspected.

M. W600 WHEEL ASSEMBLY

ASSEMBLY INSTRUCTIONS FOR W600 SERIES WHEEL

1. The brake mounting plate (**Fig. 1 & 2**, # 16) should be spaced from the bearing so that it aligns in the same plane and is parallel with the brake disc. (**Fig. 1**, # 21). See **Fig 7**

2. The tapered roller bearings are oiled from the factory for rust prevention but are not greased. Tapered roller bearings must be packet with suitable grease. (See Section "R" for suitable cleaners and lubricants). Apply a light film of grease to the bearing bore to lubricate the bearing seal edge and reduce initial installation drag.

IMPORTANT NOTE: Axle Nut Torque

Your MATCO mfg. wheel is equipped with Timken tapered roller bearings with integrated grease seals on the bearing cone to ensure the longest possible life. Torque procedures for bearings with this type of seal are different than for bearings without them. A common torqueing technique for bearings without seals is to tighten the axle nut until the wheel stops spinning freely then back off to the nearest locking feature. THIS TECHNIQUE DOES NOT WORK ON BEARINGS WITH AN INTEGRATED SEAL. The reason for the different technique is that the grease seal produces some drag and makes the wheel feel somewhat stiff when rotated. Reducing the axle nut torque until the wheel spins freely will allow the grease seal and the bearing cone to rotate improperly with the wheel. THE CONE MUST NOT ROTATE RELATIVE TO THE AXLE. The higher rolling drag is completely normal for this bearing and allows for longer bearing life since the seal will keep most contaminants out.
Timken specifications state that the two 1.25 inch tapered roller bearings used on the WE51 will produce 18-26 inch pounds of torque (*drag*) when properly installed. A light coating of grease on the seal will help reduce the drag on initial installation. The drag will also reduce after the bearings have been installed and the seal relaxes in the bore. It is important that the axle nut torque be sufficient to keep the seal from rotating with the wheel. The following technique will ensure the longest possible bearing life.

3. Tightened the axle nut until all play is out of the assembly. Rotate the wheel back and forth while tightening the nut to help seat the bearings. When all play is out and the wheel rotates freely, tighten to the next slot and insert cotter pin.

4. The rubber seal on the tapered roller bearing should remain stationary while the wheel rotates around it. If the seal is spinning on the axle, tighten the nut further until the seal stops spinning with the wheel. (*See Note Above*).

5. All o-rings in the brake and master cylinder assembly are Buna Nitrile and are NOT compatible with automotive glycol based brake fluids.

NOTE Use only red aircraft fluid Mil-H-5606 or other suitable petroleum or silicon-based fluids.

6. The ideal mounting position for the brake caliper is on the trailing side of the wheel with the inlet and bleeder valve in a vertical axis. However, the caliper may be mounted at any location as long air can be properly bled from the system.

7. When using MATCO bolt on axles, they can be shimmed for toe-in or toe-out conditions, and spaced out from the wheel if necessary for the brake disk attachment screws to clear the landing gear leg. MATCO manufactures aluminum axles in black anodized 2024-T351 aluminum.

N. WHEEL ASSEMBLY TORQUE

1	1	MSCAN363-524 (NUT)	100 Inch Lbs
2 & 3	17	MSC.31-18X1.75HH	120 Inch Lbs
1	9	MSC.25-20X.75BHCS	100 Inch Lbs

O. CALIPER SPACING

CALIPER SPACING

Caliper spacing is determined by measuring the distance from the bearing face to the axle flange
1. Spacing distance "L" for the W600, W600XT, & W600XLT is 1.9 inches. See (**Fig. 7**)

BRAKE CALIPER SPACING
Fig. 7

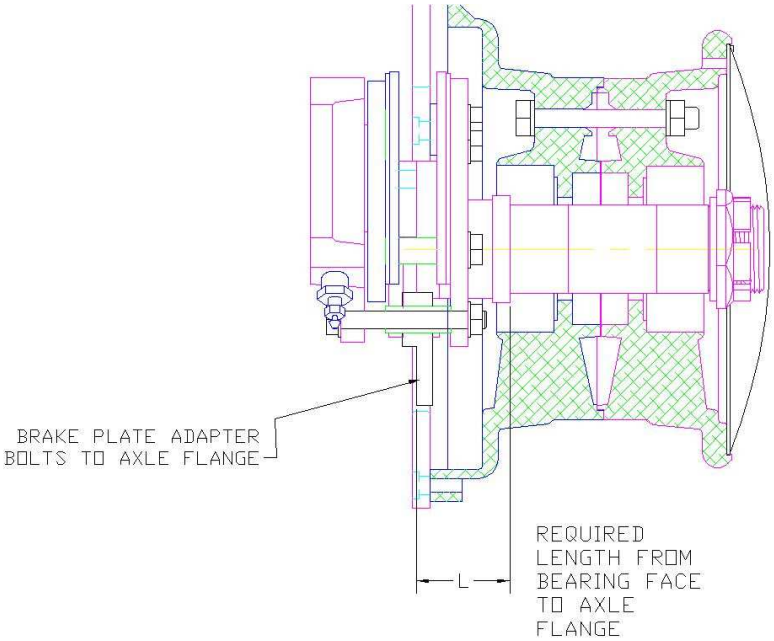

P. BLEEDING THE BRAKE SYSTEM

1. Open the brake bleeder valve slightly (**Fig. 2 & 3** #13) to facilitate bleeding of air from the system.

2. Attach a tube from the nozzle of a squirt can or brake bleeder unit of brake fluid, to the top of the brake bleeder valve. Pump the handle until oil flows bubble free from service hose before attaching.

3. Make sure that the master cylinder shaft is fully extended to open up the internal bypass valve.

4. Inject brake fluid (Mil-H-5606) or equivalent, into the puck housing and continue injecting until the fluid travels through the system in to the master cylinder.

5. Air in the system will be pushed up and out in to the master cylinder ONLY IF the master cylinder or remote reservoir is at the highest point in the system, and there are no loops in the brake lines.

6. Fluid should be pushed through the system until it reaches approximately ¼ inch from the top of the master cylinder or remote reservoir

.

7. Close the brake bleeder valve, and remove the service hose.

8. GENTLY stroke each cylinder. If the brake system is free of air, the brake pedal should feel firm and not spongy. If not, repeat steps 1 through 7 until system is free of trapped air.

9. Fluid leakage from the top of the MCMC-5 or 5A master cylinder during operation indicates too high a fluid level.

10. Ensure that all drilled bolts are properly safety wired.

NOTE The MCMC-5 is NOT approved for inverted flight.

Fig. 8

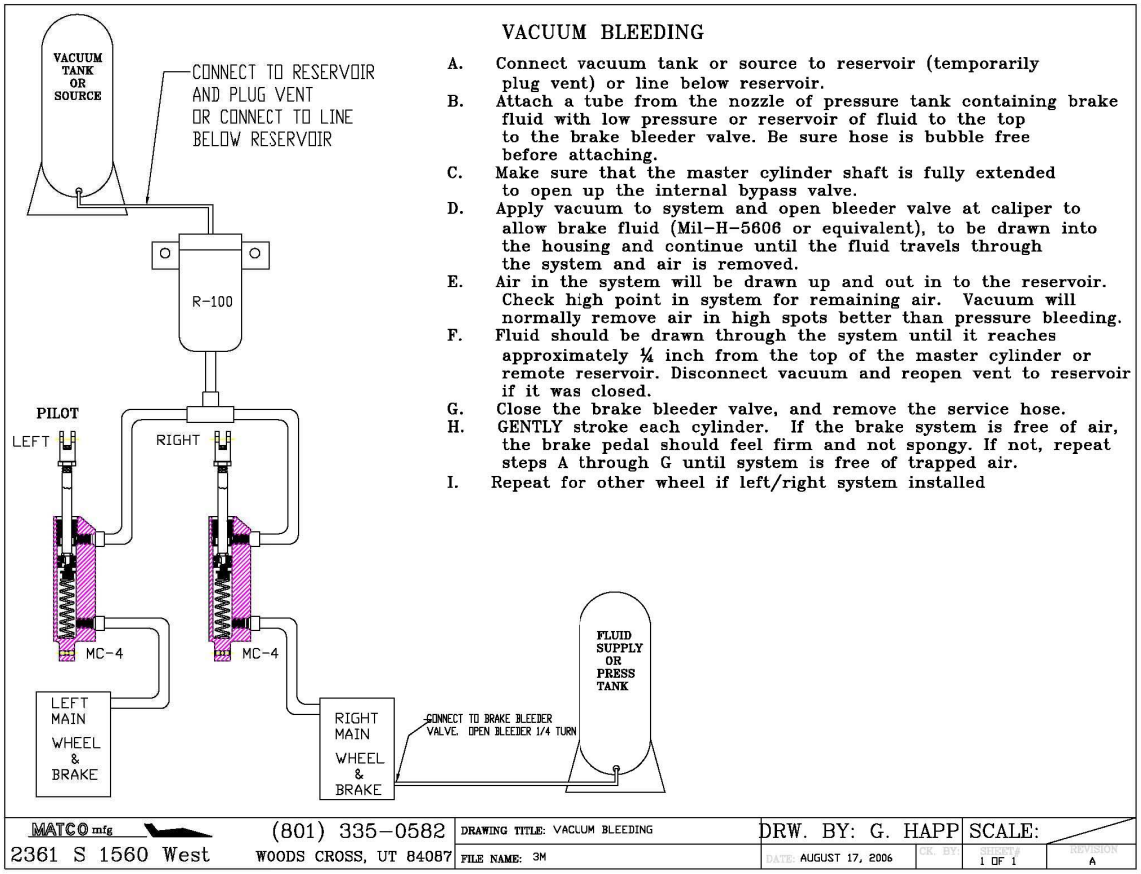

VACUUM BLEEDING

A. Connect vacuum tank or source to reservoir (temporarily plug vent) or line below reservoir.
B. Attach a tube from the nozzle of pressure tank containing brake fluid with low pressure or reservoir of fluid to the top to the brake bleeder valve. Be sure hose is bubble free before attaching.
C. Make sure that the master cylinder shaft is fully extended to open up the internal bypass valve.
D. Apply vacuum to system and open bleeder valve at caliper to allow brake fluid (Mil-H-5606 or equivalent), to be drawn into the housing and continue until the fluid travels through the system and air is removed.
E. Air in the system will be drawn up and out in to the reservoir. Check high point in system for remaining air. Vacuum will normally remove air in high spots better than pressure bleeding.
F. Fluid should be drawn through the system until it reaches approximately ¼ inch from the top of the master cylinder or remote reservoir. Disconnect vacuum and reopen vent to reservoir if it was closed.
G. Close the brake bleeder valve, and remove the service hose.
H. GENTLY stroke each cylinder. If the brake system is free of air, the brake pedal should feel firm and not spongy. If not, repeat steps A through G until system is free of trapped air.
I. Repeat for other wheel if left/right system installed

Fig. 7

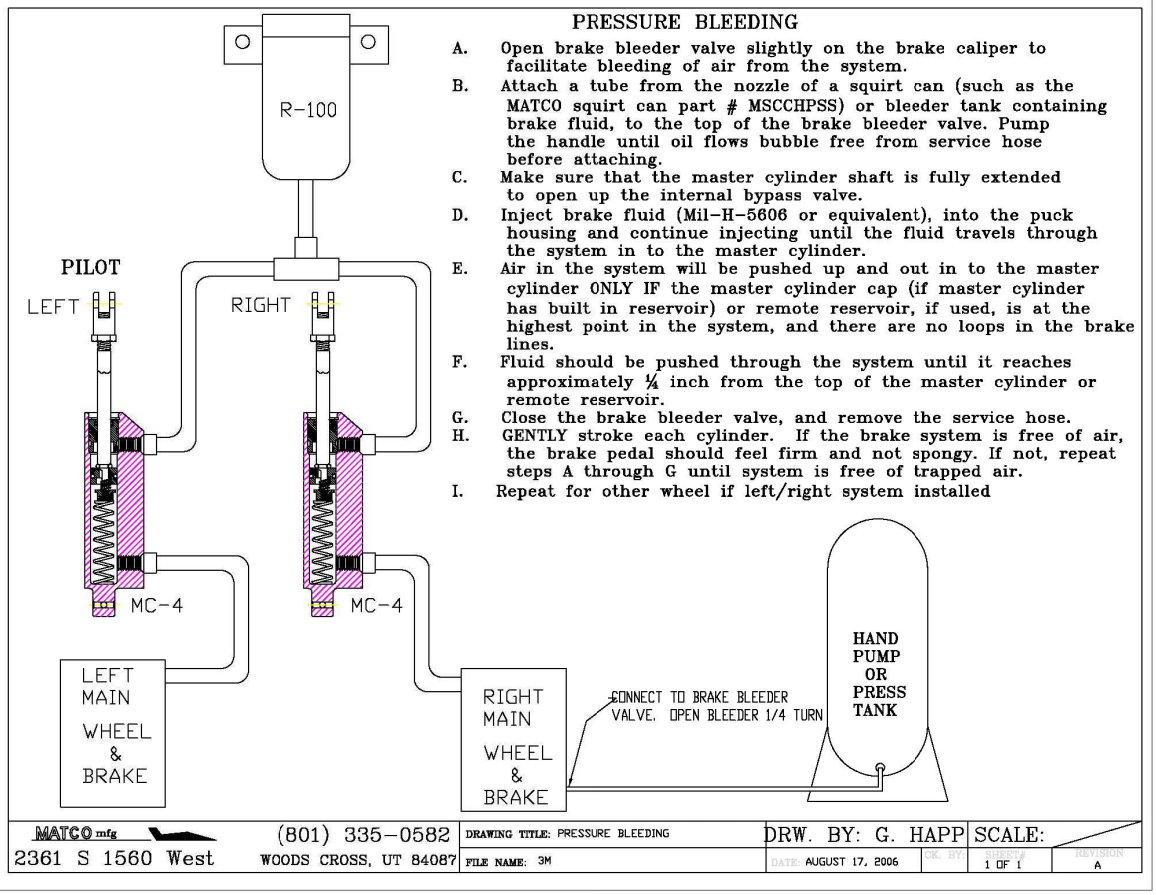

PRESSURE BLEEDING

A. Open brake bleeder valve slightly on the brake caliper to facilitate bleeding of air from the system.
B. Attach a tube from the nozzle of a squirt can (such as the MATCO squirt can part # MSCCHPSS) or bleeder tank containing brake fluid, to the top of the brake bleeder valve. Pump the handle until oil flows bubble free from service hose before attaching.
C. Make sure that the master cylinder shaft is fully extended to open up the internal bypass valve.
D. Inject brake fluid (Mil-H-5606 or equivalent), into the puck housing and continue injecting until the fluid travels through the system in to the master cylinder.
E. Air in the system will be pushed up and out in to the master cylinder ONLY IF the master cylinder cap (if master cylinder has built in reservoir) or remote reservoir, if used, is at the highest point in the system, and there are no loops in the brake lines.
F. Fluid should be pushed through the system until it reaches approximately ¼ inch from the top of the master cylinder or remote reservoir.
G. Close the brake bleeder valve, and remove the service hose.
H. GENTLY stroke each cylinder. If the brake system is free of air, the brake pedal should feel firm and not spongy. If not, repeat steps A through G until system is free of trapped air.
I. Repeat for other wheel if left/right system installed

Q. CONDITIONING PROCEDURES

NOTE It is important to condition the new linings after installation to obtain maximum service life and performance. The procedures below show when and how this should be done.

1. After the linings have been installed, apply brake pressure during high throttle static run-up. Note RPM at creep if any occurs.
2. Perform 2-3 high-speed taxi snubs to generate 300-400 degrees at brake pads and rotor by accelerating the aircraft to 30-40 mph. Remove power and apply firm braking pressure until slowed to 5 mph and release pressure. Do not bring aircraft to a complete stop during the taxi snubs. After accomplishing the snubs, do not drag the brakes. Allow the aircraft to roll as brake free as practicable until back to the tie down area. Avoid stopping the aircraft completely as much as practicable and park with brake pressure off
3. Repeat step one and note RPM at creep if any occurs. There should be a noticeable increase in holding torque.
4. If properly conditioned, the pads will have a uniform shiny appearance (*glaze*) on the surface. Repeat steps 1-3 if necessary to produce glaze.

NOTE Forward movement of the aircraft during static runup could be caused by the wheels skidding and not brake malfunction. Use caution when breaking heavy on aircraft with a tail-wheel as it could cause the tail to lift from the ground.

Conditioning removes high spots, and creates a layer of glazed material at the lining surface. Normal braking will produce enough heat to maintain glazing during the life of the lining. Glazing can be worn off during light use such as taxiing.

GETTING YOUR PEDAL GEOMETRY RIGHT

BRAKE SPECIFICATIONS

All MATCO mfg. brakes have two specified ratings. The first is the energy rating which specifies the energy capacity of the brake. This value is used in selecting a brake that will be able to absorb the kinetic energy of the aircraft under the designers specified maximum energy condition (*generally maximum aircraft weight at a velocity above stall speed*). The energy rating is determined by the disc weight. Exceeding the energy capacity of a braking system leads to excessive disc temperatures. This can cause low friction coefficients and reduce brake torque and aircraft deceleration. Permanent damage to the disc can result in the form of warping or loss of corrosion protection.

BRAKE TORQUE

The second rating is for brake torque. The rated torque value is used to determine the deceleration and static torque for engine run-up that will be provided by the brake. A braking system using the same disc can have one energy rating and several torque ratings. This is possible by using different caliper configurations on the same disc. For example a braking system using a single caliper on a disc with a 189K ft-lb rating may have a torque rating of 1980 in-lb. The same braking system using two calipers would have the same energy rating of 189K ft-lb but would have a torque rating of 3960 in-lb. MATCO mfg. offers its customers a wide range of caliper configurations and disc sizes to allow for meeting both the energy and torque requirements of their aircraft.

R. MAXIMIZING BRAKE OUTPUT

The rated torque value assumes a nominally conditioned brake pad (*see pad conditioning procedures section 'X'*), rated pressure applied to the brake, free floating calipers, and pad contact on both sides of the disc. Brake pad conditioning allows a glaze to form on the pads and provides the highest friction coefficient and drag force. MATCO mfg. Brake torque ratings are based on 450 psi applied pressure. Pressures below this value will generate proportionally lower torque. Pressures above this value will provide higher torque although pressures above 600 psi generally cause caliper deflections that reduce the torque increase. The torque rating assumes that all caliper force is used to squeeze the brake pads against the disc. If the caliper does not float freely, it is possible that only one side of the disc surface may be contacted resulting in 50% loss of torque.

GET THE PRESSURE RIGHT

Assuming the calipers are properly mounted so that the pads make contact on both sides of the disc (both new and worn) and are maintained so that the calipers float freely, the most common reason for under performance of the brakes is low pressure. MATCO mfg. Brakes need 450 psi to achieve their rated torque. Additional calipers can be added to get higher torque at lower pressures, but is often more weight efficient to modify the hydraulic system pedal geometry to generate higher pressures. Systems using hand or foot operated master cylinders require a minimum of 2.5 to 1 mechanical advantage when using master cylinder, MC, like the MC-4 or MC-5 which have .625 inch diameter pistons. *(Systems using MC-4 or MC-5 with intensifiers have .500-inch pistons and require a 1.6 to 1 mechanical advantage).* Mechanical advantage, MA, is the ratio of the force applied to the master cylinder shaft divided by the force applied by the hand or foot.

Dia.1 shows two examples of pedal geometry. The first has an MA of 1 to 1 since the distance from the applied load to the pivot point is the same as the distance to the MC and is undesirable. The second shows a more favorable configuration that will easily provide the required pressure to the brakes with moderate toe force. It is often necessary to keep the foot pedal shorter than that shown in **Dia.1**. An alternate geometry is shown in **Dia.2**. This design would utilize a fork arrangement on the MC connection to allow clearance of the MC body and then a short linkage to the MC connect point. A design common to many aircraft uses linkage as shown in **Dia.3**. This design also allows for a shorter brake pedal but has a major disadvantage. This linkage can be configured to have a proper MA in the start position (with the master cylinder fully extended). The MA varies with rotation however, as shown in **Fig.2** of **Dia.3**, a 15 degree rotation of the linkage reduces the MA at the start position from 1.5 to 1 down to only 1.12 to 1. In actual operation, this has the effect of causing a nearly constant brake torque even though increasing force is applied. For example, if the geometry is set for an initial MA 2.5 to 1. In the start position and the pilot applies pedal force, the MC will begin to stroke as pressure builds. As the rotation occurs, the MA decreases. If there is any air in the brake lines or if there are long brake line runs, hydraulic system expansion will occur as pressure increases requiring more MC stroke. If the pilot applies more pedal force, more MC stroke occurs, and the MA decreases further. Even though the pilot has now increased his pedal force, the force applied to the MC will be only marginally increased because more rotation will result and cause a further decrease in MA. A geometry like that in **Dia.2** will provide the same reduced pedal height and is not prone to the effect of rotation since the MC is essentially connected to the brake pedal pivot. **Dia.4** illustrates the benefit of pivot connect geometry during rotation. The MA remains virtually unchanged for expected rotation angles and results in a linear pressure increase with applied pedal force.

HEEL BRAKES

A common means of providing pilots with differential braking ability without resorting to a more complicated geometry of toe brakes is to use heel brakes. The same design requirements exist for the MA of a system using heel brakes as for toe brakes. It is not uncommon to see MC's configured to allow the pilot to apply heel force directly to the MC by means of a pad or button connected on the end of the shaft. This configuration is shown in **Fig.1** of **Dia.5**. The MA of this system is 1 to 1 and produces very low pressure for reasonable heel force. Perhaps a larger concern however is the potential for causing damage to the MC. The MC is designed to accept loads applied along the length of the shaft. Loads applied off axis or perpendicular to the shaft cause bending moments in the MC shaft that it is not designed for. Damage to the MC end gland, or bending of the MC shaft may result if the off axis loads are high enough. A more desirable configuration for heel brakes is shown in **Fig.2** of **Dia.5.** This system uses a short linkage connected to the MC that provides the 2.5 to 1 MA while insuring that loads will be applied along the length on the MC and prevent any damage during actuation.

CONCLUSION

Like any system on an aircraft, the hydraulic system has many engineering options for providing the necessary requirements. The systems common on light aircraft must be engineered to provide adequate pressure to the brakes to achieve the rated torque.

NOTE MATCO mfg. Brakes require 450 psi to achieve Their rated torque.

The pedal geometry whether hand, toe, or heel operated, requires a mechanical advantage of at least 2.5 to 1**.** This allows the pilot to easily generate the required 450-psi with moderate applied force. Pivot connected geometry provides the best means of accomplishing this requirement without the problem of rotational effect that reduces mechanical advantage.

PEDAL GEOMETRY / POOR & MINIMUM
Dia. 1 Figures 1 & 2

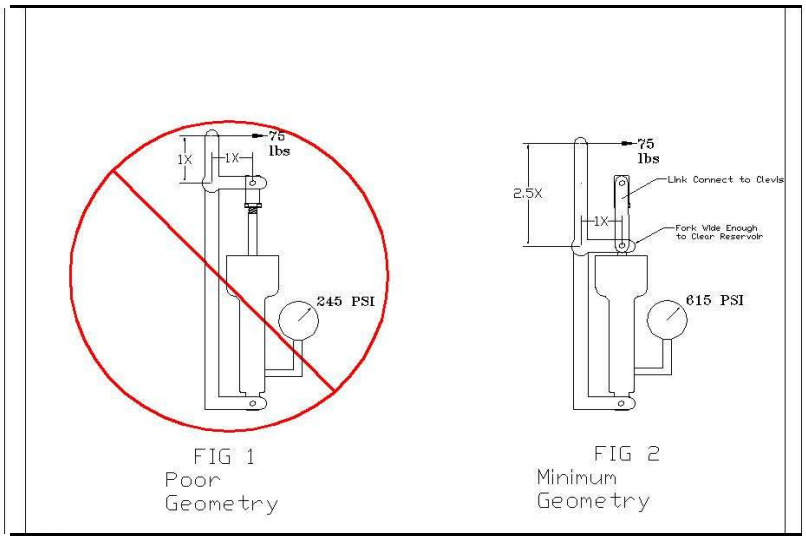

PEDAL GEOMETRY / POOR & MINIMUM
Dia. 2 Figures 1 & 2

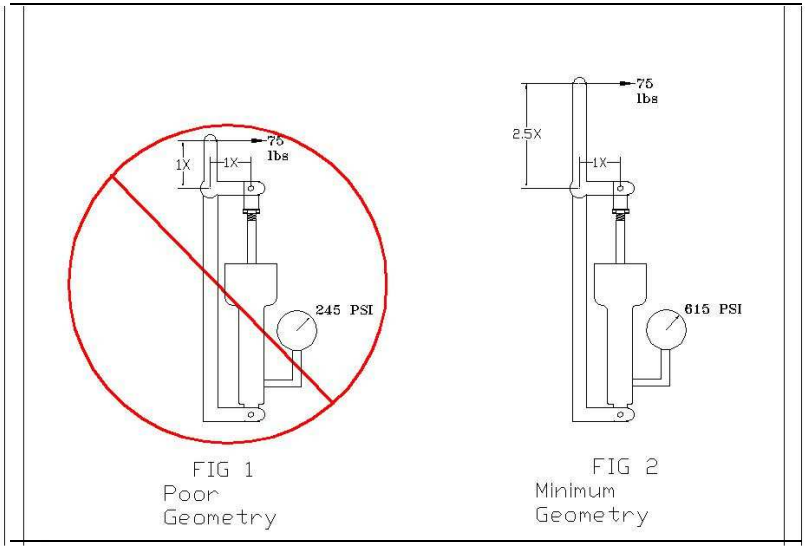

PEDAL GEOMETRY / MECHANICAL ADVANTAGE
Dia. 3 Figures 1 & 2

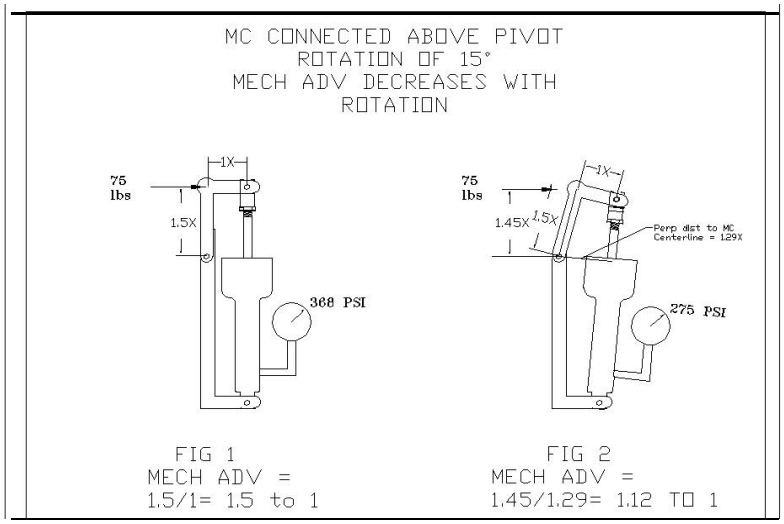

PEDAL GEOMETRY / PIVOT CONNECT
Dia. 4 Figures 1 & 2

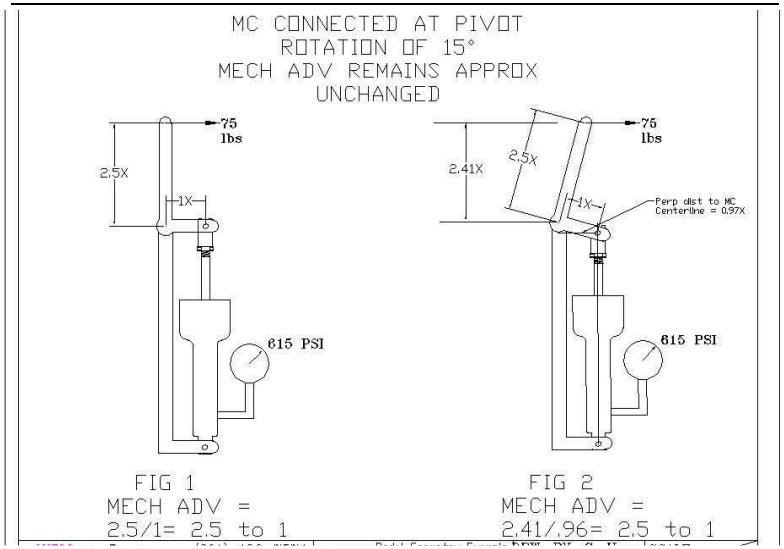

PEDAL GEOMETRY / HEEL BRAKES
Dia. 5 Figures 1 & 2

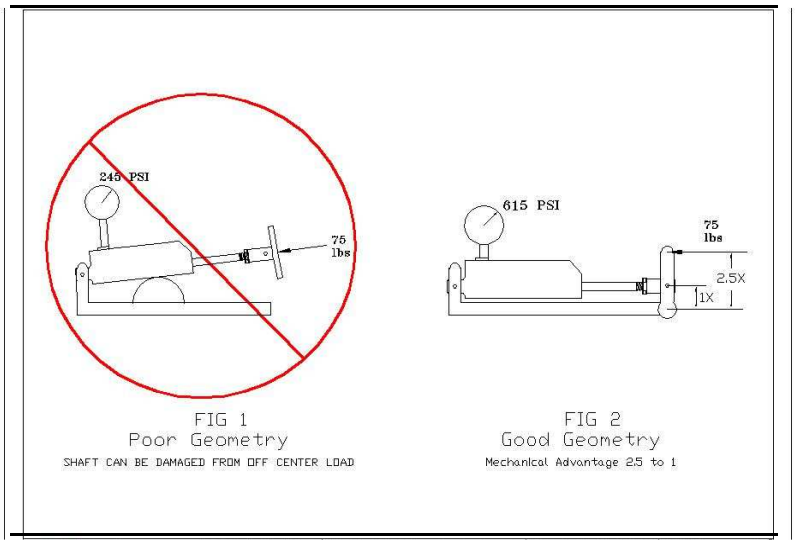

S. LUBRICANTS

ELASTOMERIC COMPOUND LUBRICANTS

HYDRAULICS:	MIL-H-5606 / MIL-H-83282 Or equivalent (Red Oils)

NOTE DOT 5.1 brake fluid is NOT compatible with MATCO mfg brakes, and will damage the Buna-N o-rings used in the system.

PETROLEUM LUBRICANTS

WHEEL BEARINGS:	MIL-G-81322 MOBIL 28 MOBIL SHC-100 AEROSHELL 22 Or equivalent lubricants
AMPHIBIOUS:	HCF Grease P/N 605 BG Products, Wichita, KS.
WHEEL NUTS / BOLTS:	MIL-T-5544 Anti seize Or equivalent

THREAD SEALANT

TAPERED PIPE THREADS:	Locktite 567, or equivalent

T. TECHNICAL ASSISTANCE

For technical Information, Product Matching, and Helpful Hints, see our website at:
www.matcomfg.com

E-mail our technical service manager for specific information at:
tech@matcomfg.com

TECHNICAL ASSISTANCE

To speak with someone in person about specific products or to find answers to technical questions, please contact us at our

TECHNICAL HOTLINE

801-335-0582

OR **FAX** US AT **801-335-0581**

Technical Support Disclaimer:

While we at MATCO mfg. strive to ensure that the advice/information provided through our support is correct, MATCO mfg. does not accept any responsibility for errors or omissions. Any advice or information that MATCO mfg. gives you, via any form of communication is not a guarantee that it will correct your problem. It is only offered as assistance to you.
MATCO mfg. will not be held responsible for any loss or damage as a result of our advice or information supplied.

NORD-LOCK Washers

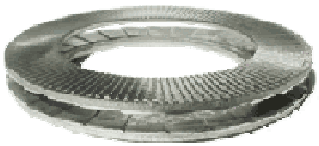

NORD-LOCK is a pair of washers with a wedge-locking action meeting DIN 25201 which is a unique method using tension instead of friction. The rise of the cams between the NORD-LOCK washers is greater than the pitch of the bolt. In addition, there are radial teeth on the opposite side. The washers are installed in pairs, cam face to cam face.

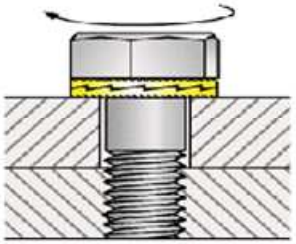

When the bolt and/or nut is tightened the teeth grip and seat the mating surfaces. The NORD-LOCK washer is locked in place, allowing movement only across the face of the cams. Any attempt from the bolt/nut to rotate loose is blocked by the wedge effect of the cams.

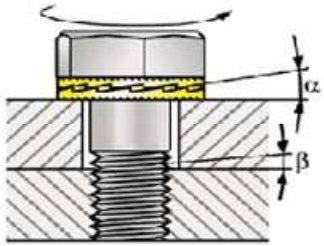

Here you see what happens when a bolt is untightened with a wrench. The pair of washers expand more than the corresponding pitch of the thread allows the bolt/nut to rise.

NORD-LOCK washers positively lock the fastener in a joint which is subjected to any kind of vibration or dynamic loads.

REPLACE the NORD-LOCK washers if the cam surface is worn and corners are rounded or if the pair does not seat cleanly against each other

NORDLOCK TORQUE VALUES

MSCNL5	#10	80 in-lb	MSCNL1/4	¼” Shoulder	100 in-lb
MSCNLX6	¼” All-Thread	100 in-lb	MSCNL8	5/16”	120 in-lb

Verify bolt bottoms against surface before installing NordLock